SHADESCAPES AMERICAS

SHADESCAPES AMERICAS
PO BOX 1012
122 EAST BRIDGE ST
HOTCHKISS, CO 81419
TOLL FREE: 1-888-217-4446
FAX: (888) 416-5951
www.shadescapesamericas.com

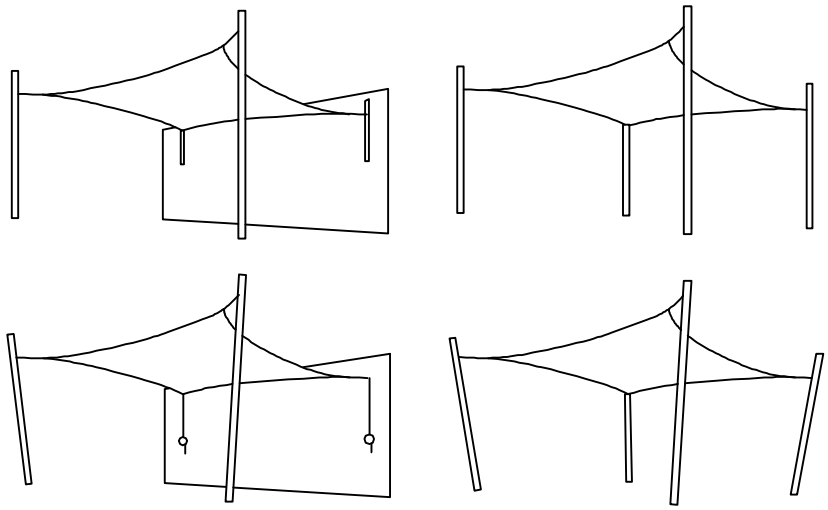

POSITIONS

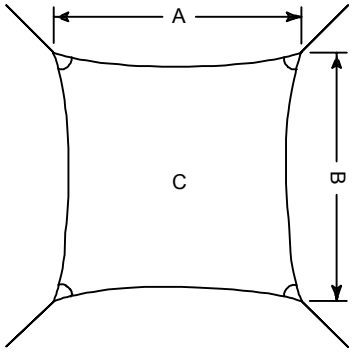

S30 TOP VIEW

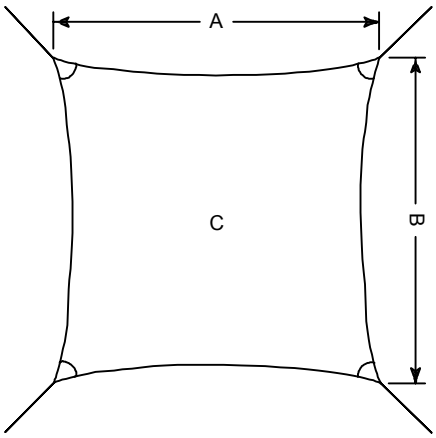

S40 TOP VIEW

	A	B	C
INGENUA	cm / ft	cm / ft	m² / ft²
S30	300 / 9' 10"	300 / 9' 10"	7.8 / 84'
S40	400 / 13' 1"	400 / 13' 1"	13.8 / 149'

NOTES:

1. INSTALLATION TO BE COMPLETED IN ACCORDANCE WITH MANUFACTURER'S SPECIFICATIONS.
2. ALL IMPERIAL DIMENSIONS ARE METRIC CONVERSIONS AND HAVE BEEN ROUNDED TO THE NEAREST 1". IF EXACT DIMENSIONS ARE REQUIRED, SEE THE UMBROSA METRIC DIMENSIONS.
3. DO NOT SCALE DRAWING.
4. THIS DRAWING IS INTENDED FOR USE BY ARCHITECTS, ENGINEERS, CONTRACTORS, CONSULTANTS AND DESIGN PROFESSIONALS FOR PLANNING PURPOSES ONLY. THIS DRAWING MAY NOT BE USED FOR CONSTRUCTION.
5. ALL INFORMATION CONTAINED HEREIN WAS CURRENT AT THE TIME OF DEVELOPMENT BUT MUST BE REVIEWED AND APPROVED BY THE PRODUCT MANUFACTURER TO BE CONSIDERED ACCURATE.

INGENUA (SHADE SAILS)

INGENUA SQUARE S30, S40

REVISION DATE 05/26/2015